US

Material Handler | F-Series

MHL 360

255 hp (190 kW) (Diesel)
160 kW (Electric)

max. 107,585 lbs

max. 59'

FUCHS®
A TEREX BRAND

TECHNICAL DATA

OPERATING WEIGHT WITHOUT ATTACHMENTS

MHL360 F	95,901–107,585 lbs

DIESEL ENGINE

	U.S. Tier 4 / EU Stage V	U.S. Tier 3 / EU Stage IIIA *
Manufacturer and model	Deutz TCD 7.8 L6 4V	Deutz TCD2013 L06 2V
Design	6-cylinder in-line engine	6-cylinder in-line engine
Functionality	4-stroke engine, direct common-rain fuel injection, turbocharger with charge air intercooling, controlled exhaust gas recirculation, diesel particle filter with a continuously regenerating system and SCR catalytic converter	4-stroke engine, direct common-rain fuel injection, turbocharger with charge air intercooling
Engine power	255 hp (190 kW)	250 hp (186 kW)
Rated speed	2,000 rpm	2,000 rpm
Displacement	476 cui	439 cui
Cooling system	Water and charge air cooling with temperature controlled fan speed	Water and charge air cooling with temperature controlled fan speed
Exhaust emission standard	U.S. Tier 4 / EU Stage V	U.S. Tier 3 / EU Stage IIIA *
Fuel tank	153.2 gal Diesel	153.2 gal Diesel
DEF / Urea tank	13.2 gal Ad Blue	■

ELECTRIC MOTOR

Power	160 kW
Total connected load	210 kW
Motor start	Via soft start
Optional cable reel	Up to 164 ft (other lengths on request)

ELECTRICAL SYSTEM

Alternator	28 V / 100 A
Operating voltage	24 V
Battery	2 × 12 V / 110 Ah / 750 A (as per EN)
Lighting System	2 x LED floodlights at the front of the machine, rear lights and indicator lights
Optional	20 kW or 30 kW DC generator with control and insulation monitoring

TRAVEL DRIVE

Hydrostatic drive through infinitely variable axial piston motor with directly mounted travel brake valves, 2-gear transmission, all-wheel drive

Travel speed 1st Gear	max. 3 mph
Travel speed 2nd Gear	max. 9 mph
Gradeability	max. 30 %
Turning radius	31'2"

SLEWING DRIVE

Slewing ring	Double slewing ring with inner teeth
Drive	2-stage planetary gear with integrated multi-disk brake
Uppercarriage swing speed	0–6 rpm infinitely variable
Slewing lock	Electronically activated

UNDERCARRIAGE

Front axle	Planetary drive axle with integrated drum brake, rigid bearing, max. steering angle 27°
Rear axle	Planetary drive axles with integrated drum brake, with self aligning bearing and switching oscillating lock
Outrigger	4-point outrigger
Tires	Solid rubber elastic 8 × 12.00–24

BRAKES

Service brake	A hydraulically activated single-circuit brake system that works on all four pairs of wheels
Parking brake	An electronically activated disc brake on the drive transmission that works on both axles

HYDRAULIC SYSTEM

Max. flow rate	2 × 74 gal/min & 1 × 37 gal/min (for slewing)
Max. operating pressure	4641 / 5221 psi
Hydraulic oil tank	137.4 gal

OPERATOR'S CAB

Cab	Vertically adjustable through infinitely variable hydraulic control up to a viewing height of 19' (option: vertically and horizontally adjustable to a max. viewing height of 20') Soundproof, insulating panoramic windows enabling all-round visibility, windscreen with pull-down sunblind, roof skylight, cab door sliding window, sliding door	
Air conditioning	Automatic climate control. Infinitely variable water heating with 8-speed fans, 10 adjustable nozzles, 4 set into the roof lining and 3 defrosting nozzles	
Operator's seat	Air-sprung comfort seat with integrated headrest, safety belt and lumbar support, optional seat heating. Allows for comfortable working by offering universal adjustment possibilities of the seat position, the seat incline, and the position of the seat cushion in relation to the armrests and pilot controls	
Monitoring	Ergonomically-arranged, anti-glare controls, multi-functional display, automatic monitoring and storage of deviating operating conditions, (e.g. all hydraulic oil filters, hot/cold hydraulic oil temperature, coolant temperature and charge air temperature, diesel particle filter load), visual and acoustic warning up to the point of shutting feed forward control or reducing engine output. Individual sensor diagnosis using the multi-functional display, rear camera and side camera	
	U.S. Tier 4 / EU Stage V	**U.S. Tier 3 / EU Stage IIIA ***
Noise level	Sound power level (outdoor area) L_{WA} 101.8 dB(A) (measured) as per directive 2000/14/EC L_{WA} 104 dB(A) (guaranteed) as per directive 2000/14/EC Sound power level (inside the cab) as per the standard ISO 6396 L_{pA} 73 dB(A)	Sound power level (outdoor area) L_{WA} 101.5 dB(A) (measured) as per directive 2000/14/EC L_{WA} 104 dB(A) (guaranteed) as per directive 2000/14/EC Sound power level (inside the cab) as per the standard ISO 6396 L_{pA} 72 dB(A)
Vibrations	Weighted r.m.s. value of acceleration of upper limbs under 2.5 m/s² (98 in/s²) Weighted effective value of acceleration for the seat and feet under 0.5 m/s² (20 in/s²)	

Certification as per CE directives

* for low-regulated markets

EQUIPMENT

ENGINE

	Standard	Option
Intercooler and coolant radiator	●	
Direct electronic fuel injection / common rail	●	
Advanced automatic idle incl. engine shut-off function	●	
Engine preheating		●
Engine diagnostics interface	●	
Temperature-dependent fan drive	●	

UNDERCARRIAGE

All-wheel drive	●	
Drum brakes	●	
Rear axle oscillating lock	●	
2-speed powershift transmission		●
4-point stabilizers	●	
Dozer blade in addition to 4-point stabilizers		●
Stabilizer cylinders with integrated two-way check valves	●	
Piston rod protection on stabilizer cylinders	●	
Tool box	●	
Special paint (customer paint work)		●
Solid rubber tires 12.00-24 with intermediate rings	●	

UPPERCARRIAGE

Separate cooling system for engine and hydraulic oil cooler	●	
Cooling system with temperature-dependent fan drive	●	
Fan drive reversing function		●
Automatic central lubrication system	●	
Rear view camera	●	
Side view camera	●	
Driving warning device		●
Electric refuelling pump		●
Lighting protection		●
Special paint (customer paint work)		●

CAB

Hydraulically adjustable cab	●	
Cab system which can be elevated and moved forward		●
Safety glass	●	
Sliding window in cab door	●	
Reinforced glass P5A (windscreen and roof panel)		●
Reinforced glass P5A (windscreen and roof panel) (FQC)	●	

CAB

	Standard	Option
Windshield washer system	●	
Roof washer system		●
Air-cushioned operator seat with headrest, seatbelt, and lumbar support	●	
Seat heating		●
Joystick steering	●	
Steering column, height and tilt adjustable		●
Automatic air conditioning system	●	
Independent heating system		●
Multi-function display	●	
Document net	●	
FOPS Guard		●
Front and FOPS Guard		●
12 V transformer		●
Radio USB & Bluetooth	●	
12 V socket		●
Fire extinguisher, dry powder		●
Travel alarm w/ rotating beacon		●

OTHER EQUIPMENT

20 kW DC generator with controls		●
30 kW DC generator with controls		●
Close proximity range limiter for dipper stick	●	
Coolant and hydraulic oil level monitoring system	●	
Filter system for attachments		●
Filter system for attachments (FQC)	●	
Hose rupture valves for boom cylinder with integrated regeneration function	●	
Hose rupture valves for stick cylinder with integrated regeneration function	●	
Overload warning device		●
Quick coupling on dipper stick	●	
Dipper stick impact protection		●
Active cyclone prefilter (TOP AIR)		●
Hydraulic oil preheating		●
Lubrication of the grab suspension by central lubrication system	●	
Light packages LED		●
LED front headlights	●	
LED working lights cabin roof front		●
Boom cylinder damping system (piston accumulator)		●
Fuchs Telematics System, incl. 5 years contract	●	

DIMENSIONS

All dimensions in ft and inch

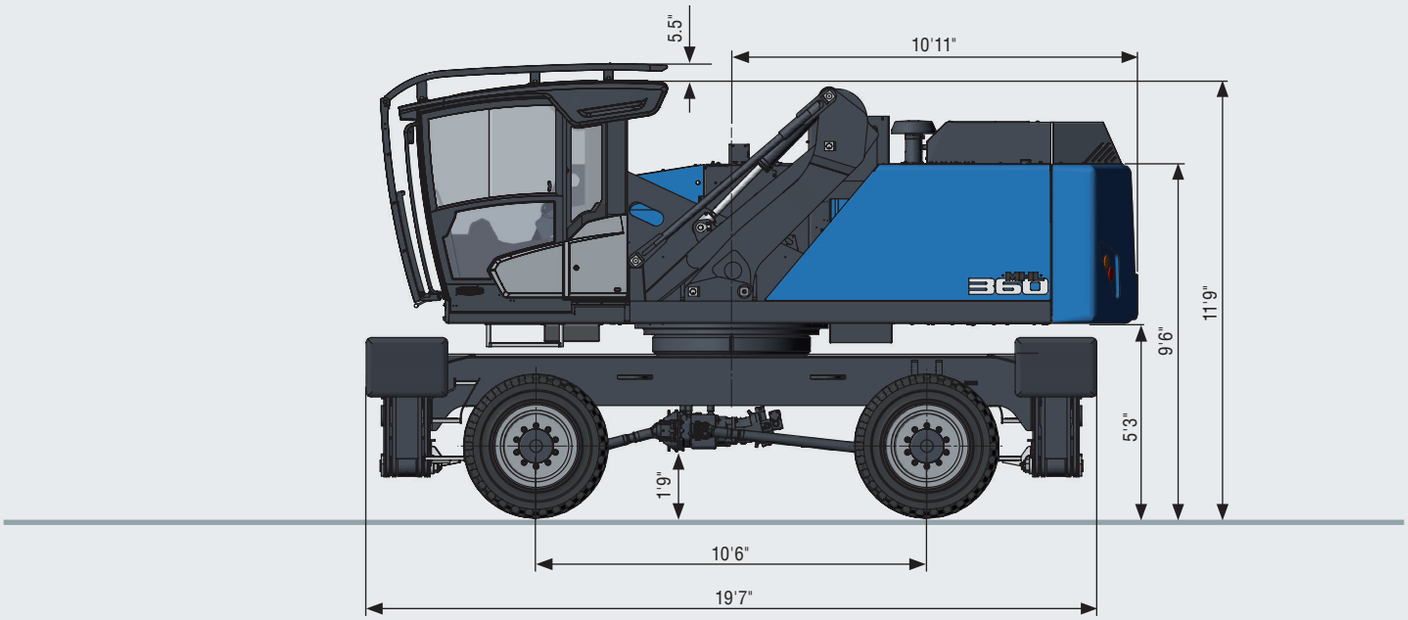

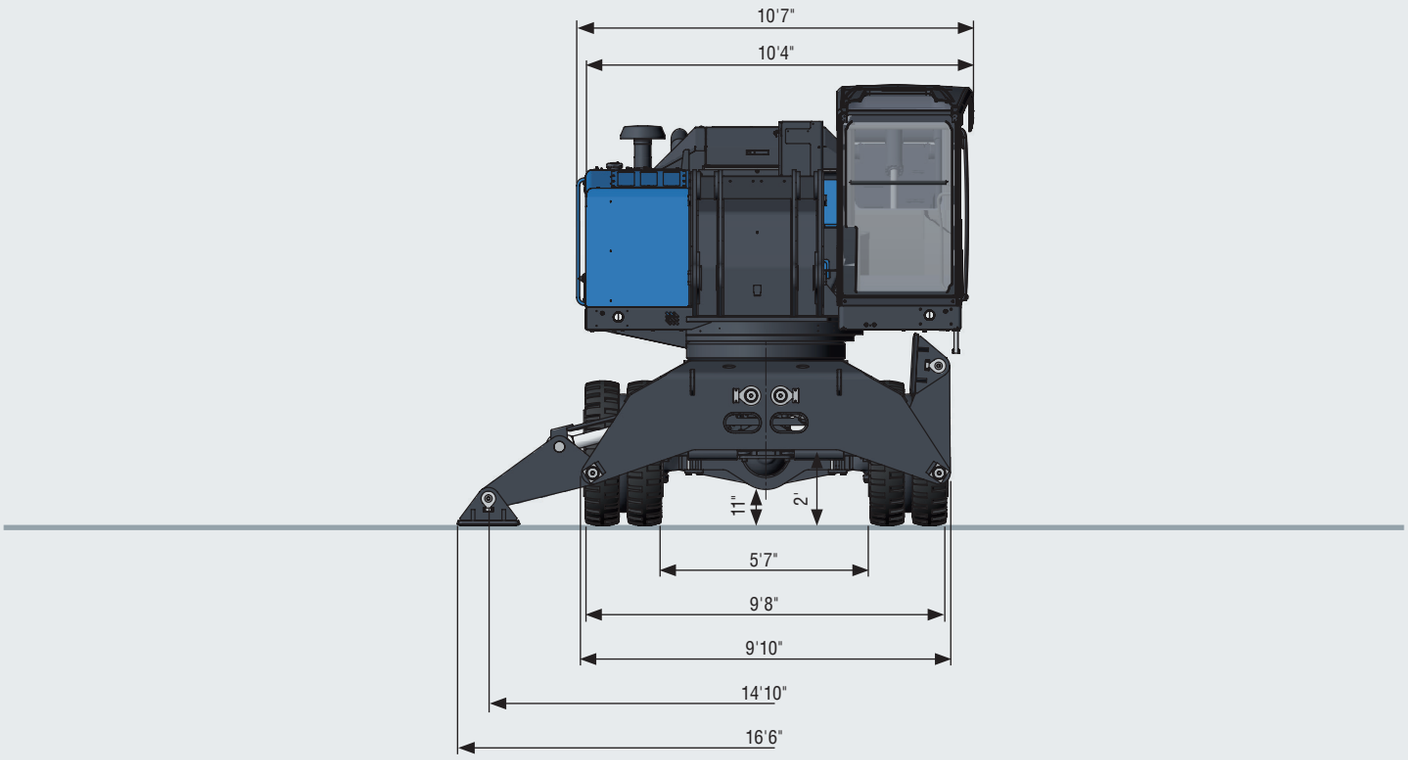

DIMENSIONS

All dimensions in ft and inch

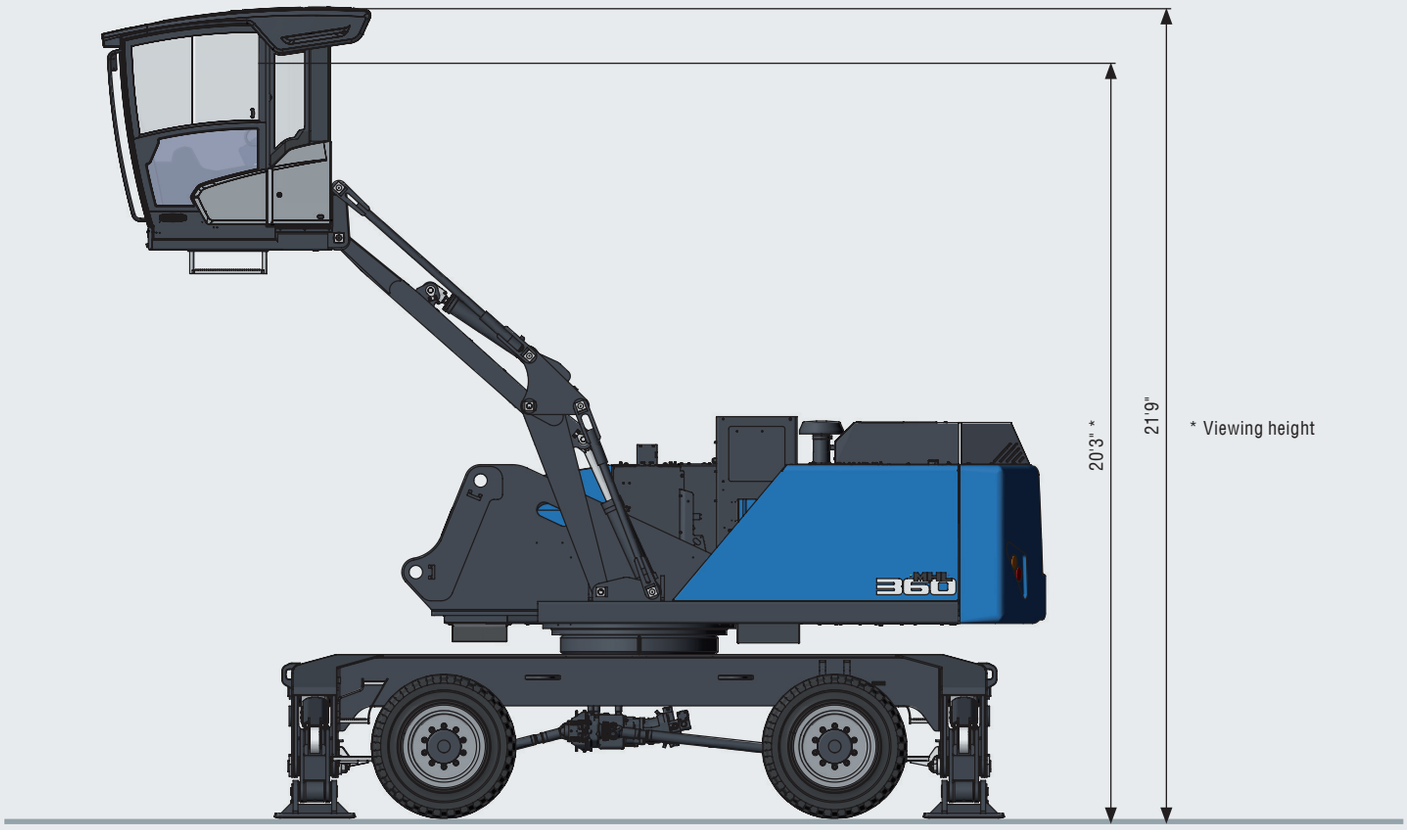

TRANSPORT DIMENSIONS

With dipper stick
All dimensions in ft and inch

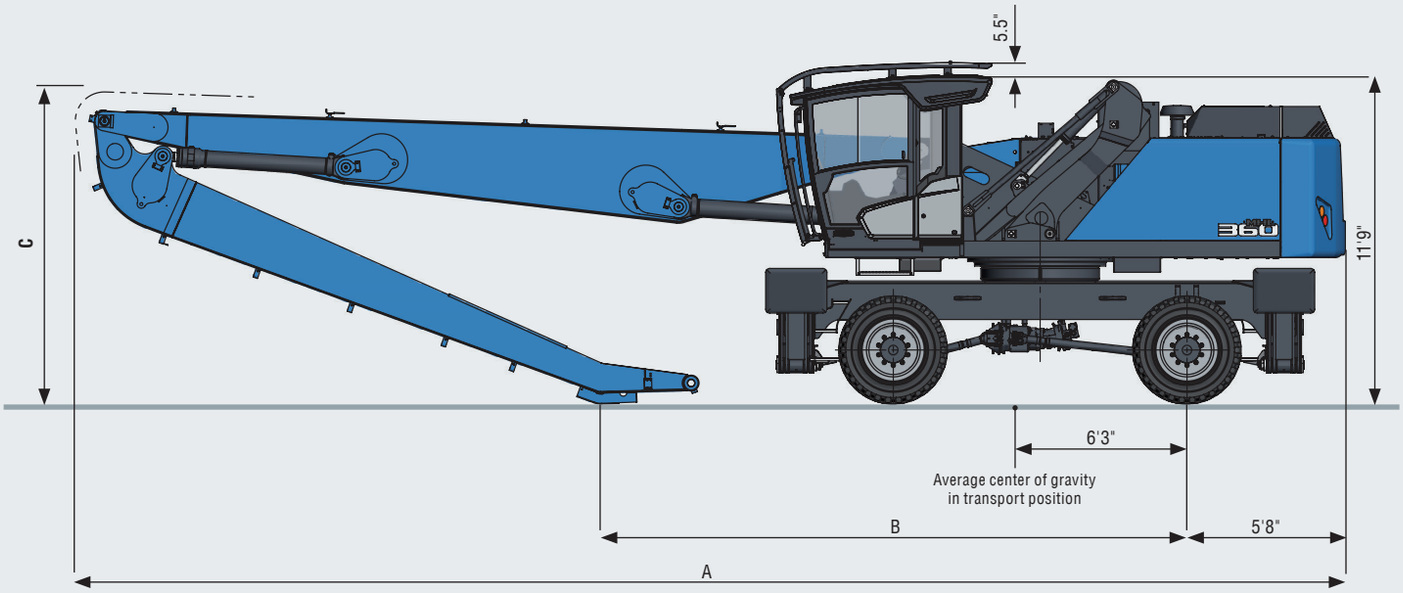

	54'2"	59'
A	45'5"	48'
B	20'11"	21'
C	11'2"	12'

TRANSPORT DIMENSIONS

Reach 59' with banana boom
All dimensions in ft and inch

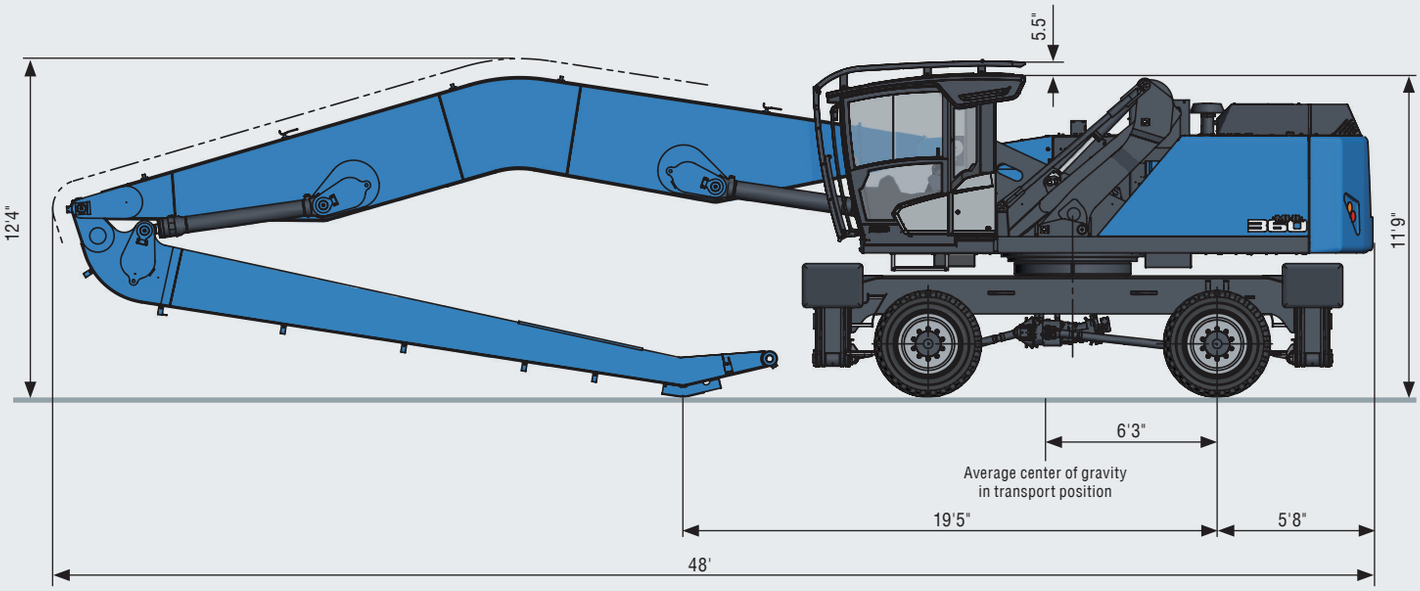

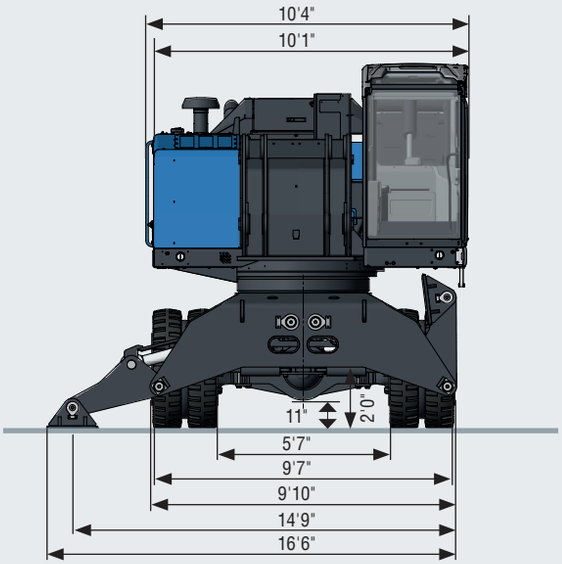

View with roof panel and exterior mirrors removed

MHL360 F-SERIES | www.terex-fuchs.com


MHL
360
FUCHS
FUCHS
A TEREX BRAND

54'2" WITH DIPPER STICK

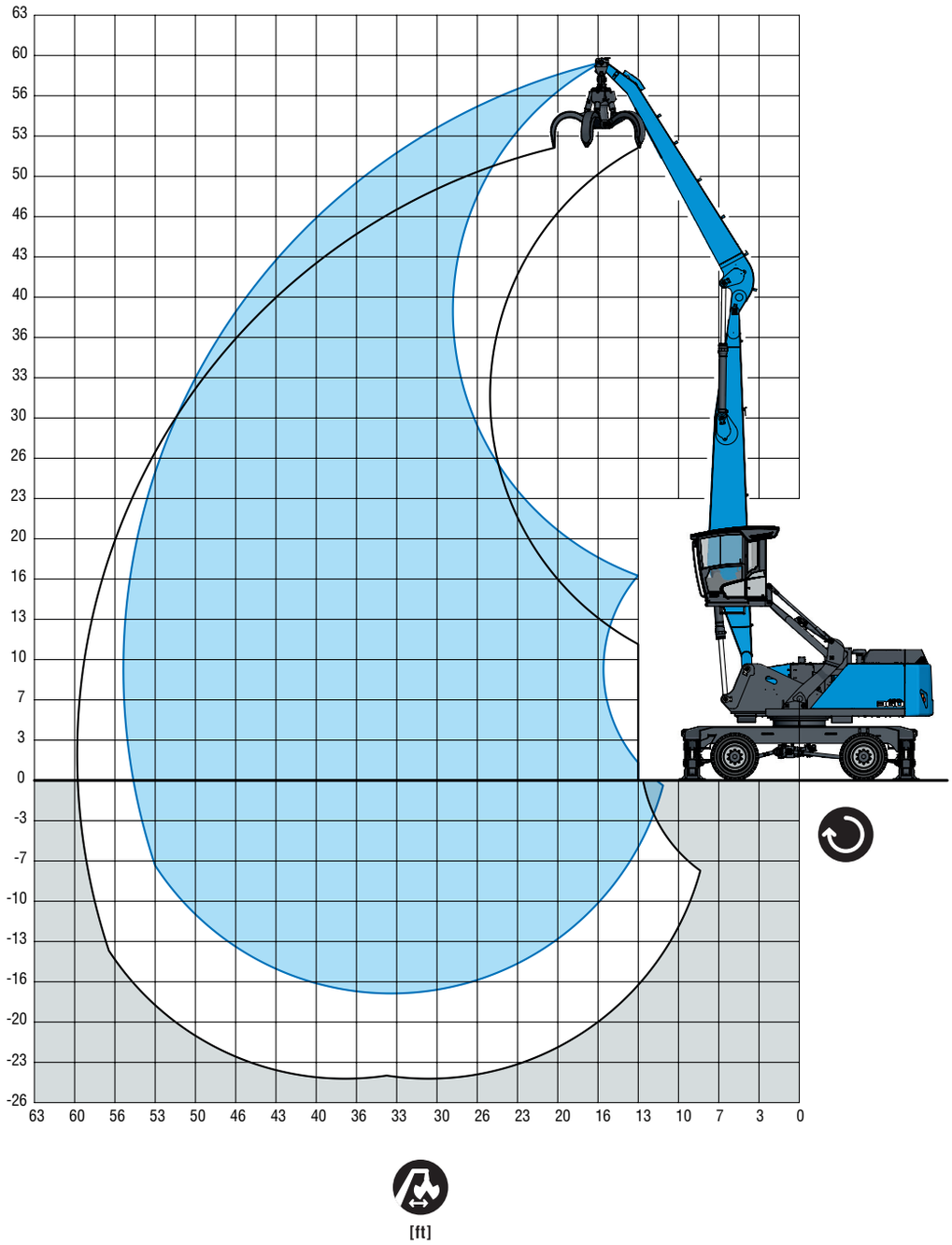

LOADING EQUIPMENT

Boom	29'2"
Dipper stick	22'9"
Cactus grab	1.05 yd³

RECOMMENDED ATTACHMENTS

Recommended attachments upon request

LIFTING CAPACITY

		15 ft	20 ft	25 ft	30 ft	35 ft	40 ft	45 ft	50 ft	55 ft
50 ft					(18,610°)	(12,970°)				
					18,610° (18,610°)	12,970° (12,970°)				
45 ft					(19,330)	(14,810)	(11,490)			
					20,580° (20,580°)	18,440° (18,440°)	12,950° (12,950°)			
40 ft					(19,520)	(15,030)	(11,810)	(9,300)		
					20,250° (20,250°)	18,170° (18,170°)	16,500° (16,500°)	11,090° (11,090°)		
35 ft					(19,440)	(15,000)	(11,850)	(9,470)		
					20,320° (20,320°)	18,170° (18,170°)	16,420° (16,420°)	14,320 (14,920°)		
30 ft					(19,100)	(14,760)	(11,720)	(9,440)	(7,640)	
					20,770° (20,770°)	18,430° (18,430°)	16,530° (16,530°)	14,290 (14,910°)	11,820 (12,390°)	
25 ft				(24,840°)	(18,490)	(14,350)	(11,440)	(9,290)	(7,610)	
				24,840° (24,840°)	21,560° (21,560°)	18,890° (18,890°)	16,770° (16,770°)	14,120 (14,990°)	11,780 (13,360°)	
20 ft			(32,660°)	(23,520)	(17,620)	(13,770)	(11,060)	(9,050)	(7,480)	
			32,660° (32,660°)	26,950° (26,950°)	22,600° (22,600°)	19,470° (19,470°)	16,760 (17,060°)	13,860 (15,090°)	11,650 (13,320°)	
15 ft		(37,480)	(30,610)	(21,820)	(19,580)	(13,090)	(10,610)	(8,750)	(7,300)	(6,130)
		52,920° (52,920°)	37,480° (37,480°)	28,940° (28,940°)	23,670° (23,670°)	20,000° (20,000°)	16,280 (17,320°)	13,550 (15,140°)	11,460 (13,220°)	9,800 (10,670°)
10 ft			(27,260)	(20,000)	(15,470)	(12,380)	(10,140)	(8,440)	(7,110)	(6,050)
			40,630° (40,630°)	30,520° (30,520°)	24,150° (24,150°)	19,220 (20,420°)	15,770 (17,440°)	13,220 (15,060°)	11,260 (12,960°)	9,710 (10,650°)
5 ft			(24,640)	(18,430)	(14,470)	(11,720)	(9,690)	(8,140)	(6,930)	(5,970)
			27,020° (27,020°)	29,970 (31,030°)	23,050 (24,720°)	18,510 (20,440°)	15,300 (17,280°)	12,910 (14,740°)	11,070 (12,480°)	9,630 (9,870°)
0 ft			(20,070°)	(17,340)	(13,700)	(11,180)	(9,320)	(7,900)	(6,780)	(5,930)
			20,070° (20,070°)	28,730 (30,120°)	22,200 (24,150°)	17,930 (19,920°)	14,900 (16,710°)	12,650 (14,080°)	10,920 (11,640°)	8,540° (8,540°)
–5 ft			(19,780°)	(16,720)	(13,200)	(10,810)	(9,060)	(7,730)	(6,700)	
			19,780° (19,780°)	27,660° (27,660°)	21,650 (22,610°)	17,520 (18,710°)	14,620 (15,610°)	12,470 (12,940°)	10,280° (10,280°)	
–10 ft			(21,300°)	(16,480)	(12,960)	(10,610)	(8,920)	(7,660)	(6,720)	
			21,300° (21,300°)	24,080° (24,080°)	20,050° (20,050°)	16,700° (16,700°)	13,820° (13,820°)	11,140° (11,140°)	8,120° (8,120°)	
–15 ft				(16,530)	(12,940)	(10,580)	(8,920)			
				19,160° (19,160°)	16,410° (16,410°)	13,740° (13,740°)	11,150° (11,150°)			
										max. reach 55'1"
–8.9 ft										(5,860)
										8,930° (8,930°)

Important notes regarding the load capacities

The lift capacity values are stated in imperial pounds (lbs). The pump pressure is 5,221 psi. In accordance with ISO 10567 the lift capacity values represents 75% of the static tipping loads or 87% of the hydraulic lifting force (marked °). On solid and level ground the values apply to a swing range of 360°. The (...) values apply in the longitudinal direction of the undercarriage. The values for "not supported" only apply via the steering axle or the locked oscillating axle. The weights of the attached load hoisting equipment (grab, load hock, etc.) must be deducted from the lift capacity values. The working load of the lifting devise must be observed. In accordance with the EN 474-5 for object handling application hose rupture valves on the boom and stick cylinders, an overload warning device and the lift capacity table in the cab are required. For object handling application the machine has to be supported on a level ground.

Reach | Engine power | Service weight without attachments | Center of rotation | Height | Undercarriage | Not supported | 4-point supported

59' WITH DIPPER STICK

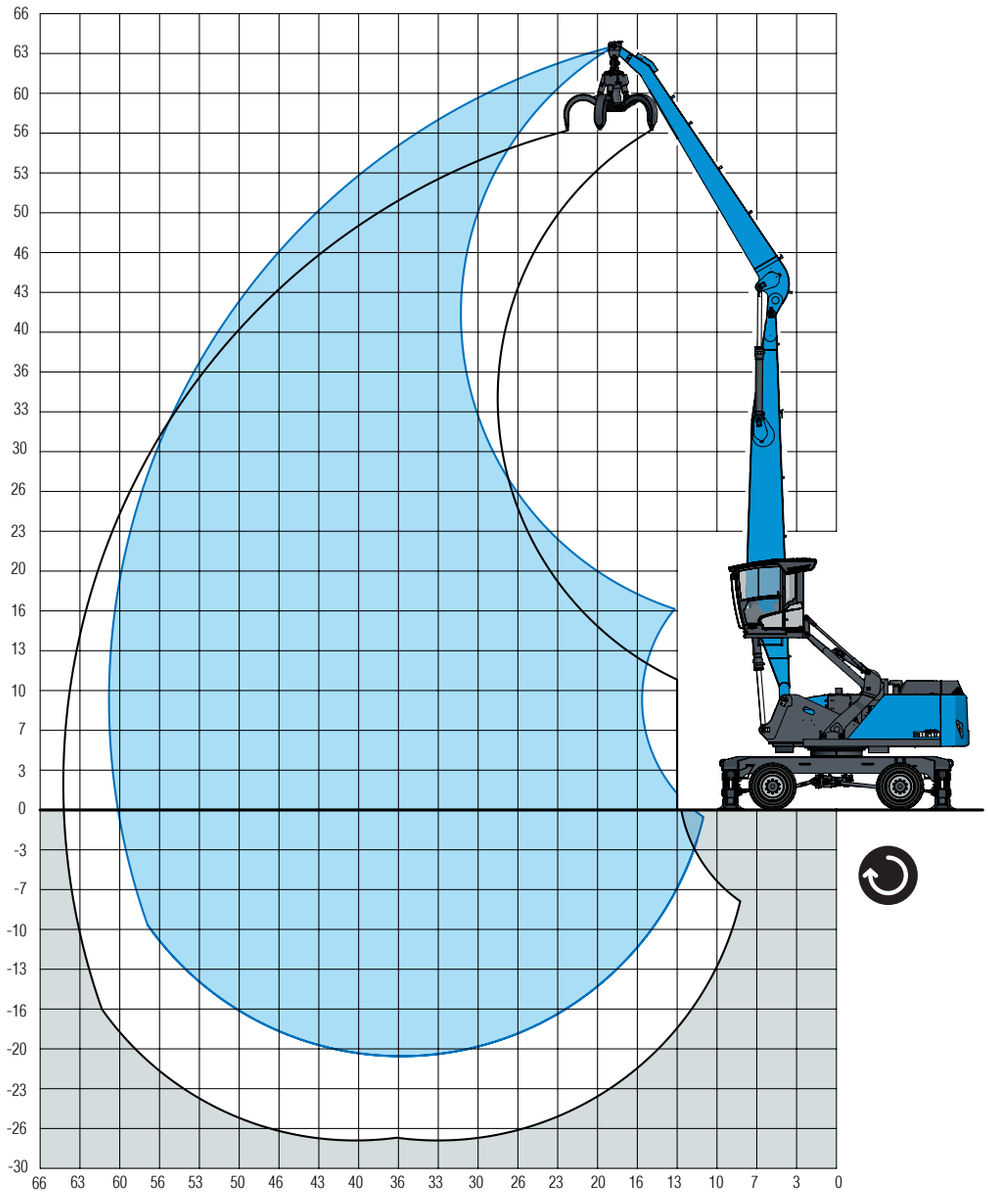

[ft]

LOADING EQUIPMENT

Boom	31'8"
Dipper stick	25'7"
Cactus grab	1.05 yd³

RECOMMENDED ATTACHMENTS

Recommended attachments upon request

LIFTING CAPACITY

		15 ft	20 ft	25 ft	30 ft	35 ft	40 ft	45 ft	50 ft	55 ft	60 ft
50 ft					(19,580°)	(15,140)	(11,770)				
					19,580° (19,580°)	17,380° (17,380°)	13,880° (13,880°)				
45 ft						(15,410)	(12,090)	(9,550)			
						17,080° (17,080°)	15,440° (15,440°)	13,140° (13,140°)			
40 ft						(15,460)	(12,170)	(9,710)	(7,740)		
						17,000° (17,000°)	15,340° (15,340°)	13,940° (13,940°)	11,380° (11,380°)		
35 ft						(15,300)	(12,080)	(9,690)	(7,810)		
						17,140° (17,140°)	15,400° (15,400°)	13,930° (13,930°)	12,050 (12,640°)		
30 ft					(19,390)	(14,950)	(11,840)	(9,530)	(7,750)	(6,300)	
					19,850° (19,850°)	17,480° (17,480°)	15,590° (15,590°)	14,020° (14,020°)	11,990 (12,650°)	10,020 (11,320°)	
25 ft					(18,630)	(14,410)	(11,460)	(9,280)	(7,600)	(6,250)	
					20,670° (20,670°)	17,980° (17,980°)	15,880° (15,880°)	14,160° (14,160°)	11,820 (12,680°)	9,960 (11,300°)	
20 ft				(23,580)	(17,600)	(13,710)	(10,970)	(8,950)	(7,380)	(6,120)	
				26,060° (26,060°)	21,690° (21,690°)	18,570° (18,570°)	16,210° (16,210°)	13,820 (14,320°)	11,590 (12,710°)	9,830 (11,240°)	
15 ft		(37,480)	(30,380)	(21,610)	(16,380)	(12,900)	(10,420)	(8,560)	(7,120)	(5,960)	(5,010)
		48,510° (48,510°)	36,400° (36,400°)	27,930° (27,930°)	22,710° (22,710°)	19,140° (19,140°)	16,140 (16,500°)	13,410 (14,430°)	11,320 (12,690°)	9,670 (11,100°)	8,320 (9,330°)
10 ft			(26,550)	(19,520)	(15,090)	(12,050)	(9,840)	(8,160)	(6,850)	(5,790)	(4,920)
			39,210° (39,210°)	29,370° (29,370°)	23,480° (23,480°)	18,950 (19,530°)	15,530 (16,660°)	12,990 (14,420°)	11,030 (12,560°)	9,480 (10,860°)	8,230 (8,950°)
5 ft			(20,210°)	(17,700)	(13,920)	(11,270)	(9,300)	(7,780)	(6,590)	(5,620)	(4,850)
			20,210° (20,210°)	29,270 (29,800°)	22,540 (23,710°)	18,100 (18,590°)	14,940 (16,580°)	12,590 (14,230°)	10,760 (12,260°)	9,310 (10,440°)	8,150° (8,320°)
0 ft			(15,350°)	(16,410)	(13,010)	(10,610)	(8,830)	(7,460)	(6,360)	(5,490)	(4,800)
			15,350° (15,350°)	27,820 (28,960°)	21,530 (23,220°)	17,400 (19,180°)	14,450 (16,160°)	12,240 (13,760°)	10,530 (11,720°)	9,170 (9,760°)	7,310° (7,310°)
–5 ft			(15,290°)	(15,660)	(12,390)	(10,140)	(8,480)	(7,210)	(6,200)	(5,400)	
			15,290° (15,290°)	26,860° (26,860°)	20,850 (21,900°)	16,880 (18,190°)	14,070 (15,310°)	11,970 (12,940°)	10,350 (10,840°)	8,730° (8,730°)	
–10 ft			(16,580°)	(15,320)	(12,050)	(9,850)	(8,260)	(7,050)	(6,110)	(5,390)	
			16,580° (16,580°)	23,660° (23,660°)	19,750° (19,750°)	16,570° (16,570°)	13,840° (13,840°)	11,660° (11,660°)	9,520° (9,520°)	7,150° (7,150°)	
–15 ft				(15,290)	(11,940)	(9,740)	(18,170)	(7,010)	(6,120)		
				19,470° (19,470°)	16,740° (16,740°)	14,220° (14,220°)	11,940° (11,940°)	9,800° (9,800°)	7,580° (7,580°)		
–20 ft						(9,800)	(8,230)				
						11,080° (11,080°)	9,200° (9,200°)				
											max. reach 60'
–8.9 ft											(4,770)
											8,020 (8,390°)

Important notes regarding the load capacities

The lift capacity values are stated in imperial pounds (lbs). The pump pressure is 5,221 psi. In accordance with ISO 10567 the lift capacity values represents 75% of the static tipping loads or 87% of the hydraulic lifting force (marked °). On solid and level ground the values apply to a swing range of 360°. The (...) values apply in the longitudinal direction of the undercarriage. The values for "not supported" only apply via the steering axle or the locked oscillating axle. The weights of the attached load hoisting equipment (grab, load hock, etc.) must be deducted from the lift capacity values. The working load of the lifting devise must be observed. In accordance with the EN 474-5 for object handling application hose rupture valves on the boom and stick cylinders, an overload warning device and the lift capacity table in the cab are required. For object handling application the machine has to be supported on a level ground.

Reach | Engine power | Service weight without attachments | Center of rotation | Height | Undercarriage | Not supported | 4-point supported

59' WITH BANANA BOOM

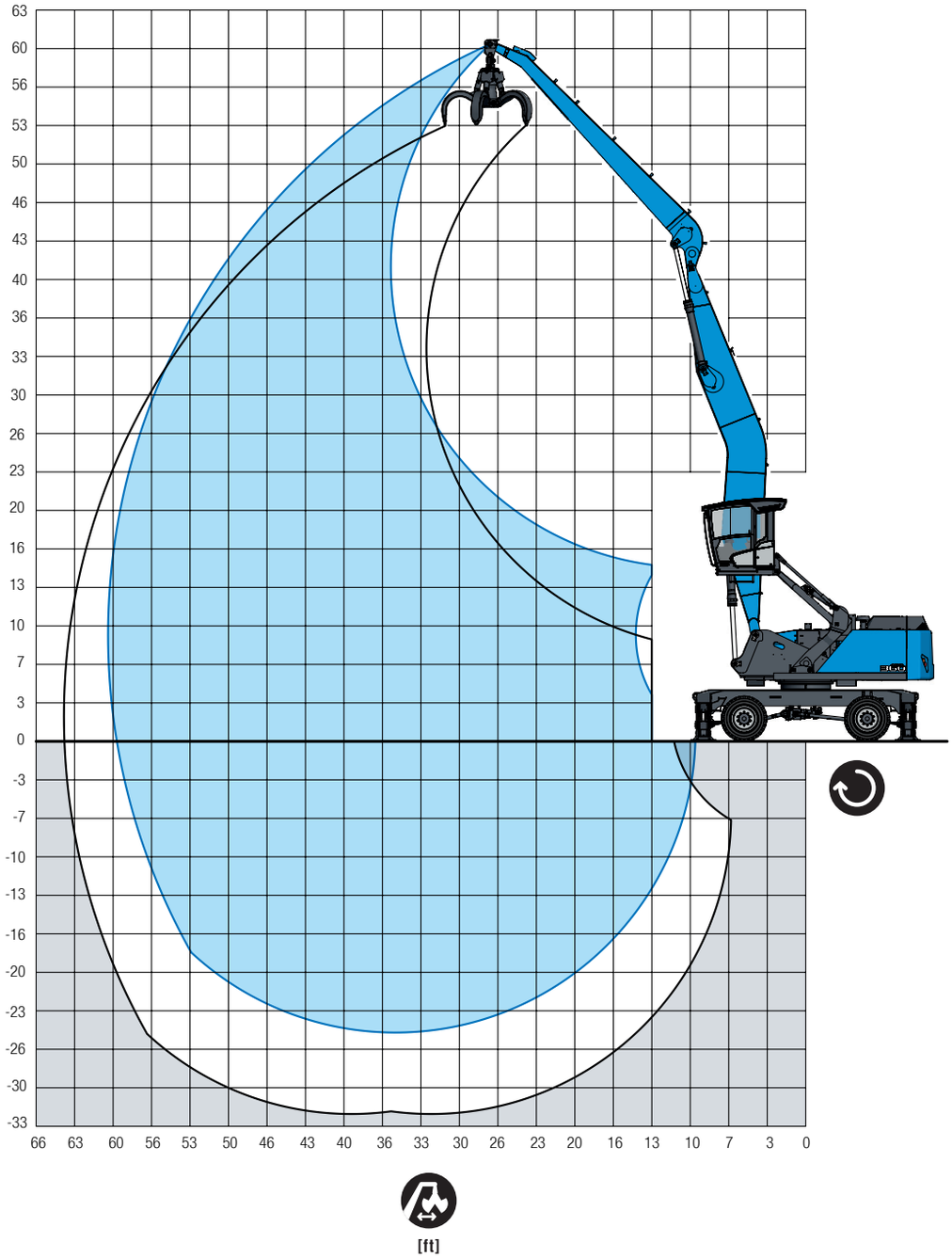

LOADING EQUIPMENT

Banana boom	31'8"
Dipper stick	25'6"
Cactus grab	1.05 yd³

RECOMMENDED ATTACHMENTS

Recommended attachments upon request

LIFTING CAPACITY

	15 ft	20 ft	25 ft	30 ft	35 ft	40 ft	45 ft	50 ft	55 ft	60 ft
50 ft					(14,460°) 14,460° (14,460°)	(11,670) 12,160° (12,160°)				
45 ft						(12,010) 13,040° (13,040°)	(9,420) 11,510° (11,510°)			
40 ft						(12,100) 12,910° (12,910°)	(9,590) 12,020° (12,020°)	(7,580) 9,730° (9,730°)		
35 ft						(12,000) 12,990° (12,990°)	(9,560) 12,020° (12,020°)	(7,660) 11,190° (11,190°)		
30 ft					(14,550°) 14,550° (14,550°)	(11,740) 13,240° (13,240°)	(9,400) 12,150° (14,150°)	(7,590) 11,230° (11,230°)	(6,120) 9,860° (9,860°)	
25 ft					(14,330) 15,150° (15,150°)	(11,340) 13,620° (13,620°)	(9,130) 12,380° (12,380°)	(7,430) 11,340° (11,340°)	(6,060) 9,790 (10,410°)	
20 ft				(17,510) 18,290° (18,290°)	(13,580) 15,910° (15,910°)	(10,820) 14,100° (14,100°)	(8,770) 12,670° (12,670°)	(7,190) 11,430° (11,430°)	(5,930) 9,660 (10,450°)	
15 ft	(37,485) 44,100° (44,100°)	(30,220) 30,830° (30,830°)	(21,440) 23,880° (23,880°)	(16,200) 19,620° (19,620°)	(12,710) 16,730° (16,730°)	(10,230) 14,610° (14,610°)	(8,360) 12,980° (12,980°)	(6,920) 11,140 (11,650°)	(5,750) 9,480 (10,480°)	(4,790) 7,970° (7,970°)
10 ft		(26,130) 34,730° (34,730°)	(19,200) 25,970° (25,970°)	(14,820) 20,850° (20,850°)	(11,810) 17,480° (17,480°)	(9,610) 15,070° (15,070°)	(7,940) 12,780 (13,240°)	(6,620) 10,830 (11,760°)	(5,570) 9,280 (10,470°)	(4,700) 8,030 (8,900°)
5 ft		(22,900) 23,450° (23,450°)	(17,260) 27,380° (27,380°)	(13,570) 21,740° (21,740°)	(10,960) 17,810° (17,810°)	(9,020) 14,690 (15,390°)	(7,530) 12,350 (13,390°)	(6,340) 10,530 (11,770°)	(5,390) 9,090 (10,350°)	(4,620) 7,940 (8,820°)
0 ft		(17,370°) 17,370° (17,370°)	(15,870) 27,270 (27,790°)	(12,580) 21,120 (22,090°)	(10,260) 17,060 (18,240°)	(8,530) 14,160 (15,480°)	(7,180) 11,970 (13,360°)	(6,100) 10,280 (11,630°)	(5,240) 8,940 (10,060°)	
–5 ft		(16,730°) 16,730° (16,730°)	(15,050) 26,350 (27,150°)	(11,910) 20,390 (21,790°)	(9,750) 16,500 (18,030°)	(8,150) 13,750 (15,250°)	(6,900) 11,690 (13,080°)	(5,920) 10,090 (11,250°)	(5,150) 8,840 (9,520°)	
–10 ft		(17,590°) 17,590° (17,590°)	(14,680) 25,550° (25,550°)	(11,540) 19,980 (20,810°)	(9,440) 16,160 (17,320°)	(7,900) 13,490 (14,630°)	(6,740) 11,510 (12,460°)	(5,830) 9,990 (10,540°)	(5,130) 8,580° (8,580°)	
–15 ft		(18,970°) 18,970° (18,970°)	(14,630) 23,060° (23,060°)	(11,420) 19,110° (19,110°)	(9,310) 16,020° (16,020°)	(7,810) 13,390° (13,390°)	(6,680) 11,380° (11,380°)	(5,830) 9,360° (9,360°)		
–20 ft		(20,600°) 20,600° (20,600°)	(14,840) 19,660° (19,660°)	(11,520) 16,630° (16,630°)	(9,360) 14,040° (14,040°)	(7,860) 11,790° (11,790°)	(6,760) 9,680° (9,680°)	(5,970) 7,410° (7,410°)		
										max. reach 59'5"
–8.9 ft										(4,620) 7,910° (7,910°)

Important notes regarding the load capacities

The lift capacity values are stated in imperial pounds (lbs). The pump pressure is 5,221 psi. In accordance with ISO 10567 the lift capacity values represents 75% of the static tipping loads or 87% of the hydraulic lifting force (marked °). On solid and level ground the values apply to a swing range of 360°. The (...) values apply in the longitudinal direction of the undercarriage. The values for "not supported" only apply via the steering axle or the locked oscillating axle. The weights of the attached load hoisting equipment (grab, load hock, etc.) must be deducted from the lift capacity values. The working load of the lifting devise must be observed. In accordance with the EN 474-5 for object handling application hose rupture valves on the boom and stick cylinders, an overload warning device and the lift capacity table in the cab are required. For object handling application the machine has to be supported on a level ground.

Reach · Engine power · Service weight without attachments · Center of rotation · Height · Undercarriage · Not supported · 4-point supported

MODULAR SYSTEM

ATTACHMENTS

Multi-tine grapple

Magnet plate

Clamshell grab

Furthermore: Timber grapple, Scrap shears, Load hook

WORK EQUIPMENT

Work equipment straight

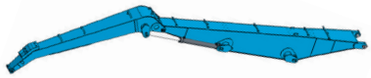

Work equipment with banana boom

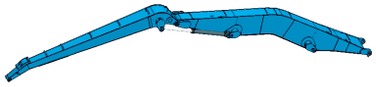

ENGINE

Diesel engine

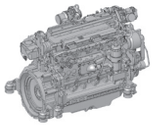

Electric motor

UPPERCARRIAGE MHL360

Cab system hydraulically adjustable

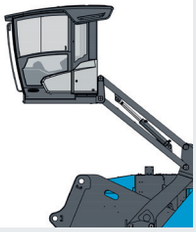

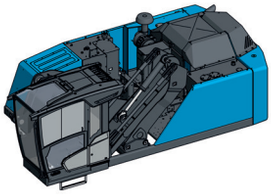

Cab system vertically adjustable and horizontally adjustable

OPTIONS

Cable reel

Cable drum

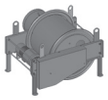

UNDERCARRIAGE

Pylon

up to max. 2'7"

Pylon

up to max. 4'7"

Pylon

up to max. 2'7"

Pylon

up to max. 12'2"

Pylon

up to max. 12'2"

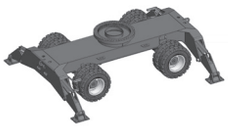

Mobile: Standard-undercarriage

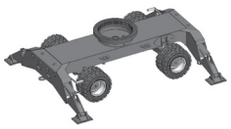

Mobile: XL-undercarriage

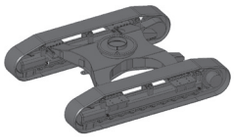

Crawler: Standard-undercarriage

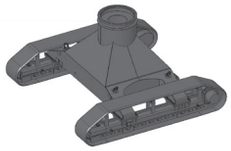

Crawler: XL-undercarriage

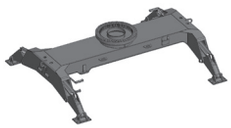

Pedestal undercarriage

FUCHS®
A TEREX BRAND

WORKS FOR YOU.™

www.terex-fuchs.com

Terex® Deutschland GmbH | Industriestraße 3 | 76669 Bad Schönborn | Germany | Fon: +49 (0) 7253 84-0 | Fax: +49 (0) 7253 84-102 | info@terex-fuchs.com